THE CONSIDERATION OF RF REFERENCE PHASE STABILIZATION FOR THE SUPERKEKB INJECTOR LINAC

Na Liu[#,1], Takako Miura[1,2], Toshihiro Matsumoto[1,2], Dai Arakawa[2], Hiroaki Katagiri[2], Yoshiharu Yano[2], Shinichiro Michizono[1,2], Feng Qiu[1,2], Sigit Basuki Wibowo[1], [1]SOKENDAI, Kanagawa 240-0193, Japan, [2]KEK, Ibaraki 305-0801, Japan

Introduction

- RF reference signal: 2856 MHz
- Delivered by coaxial cables and optical links (Furukawa optical fiber, 5 ps/km/ °C +E/O+O/E) without feedback
- The RF and optical devices are inside the temperature controlled chamber (NO humidity control), but the long optical fiber is distributed in the gallery from sector 2 to 5.

Requirement for the SuperKEKB LINAC end (Phase III)

	Unit	Goal
Beam Energy	GeV	7
Bunch charge	nC	5
Energy spread (rms)	%	0.08
Bunch length (rms)	mm	1.3
Pulse repetition	pps	50
RF pulse width	μs	4
RF reference phase (rms)	deg.	0.1

RF saturation point

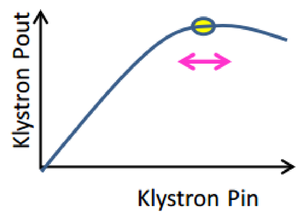

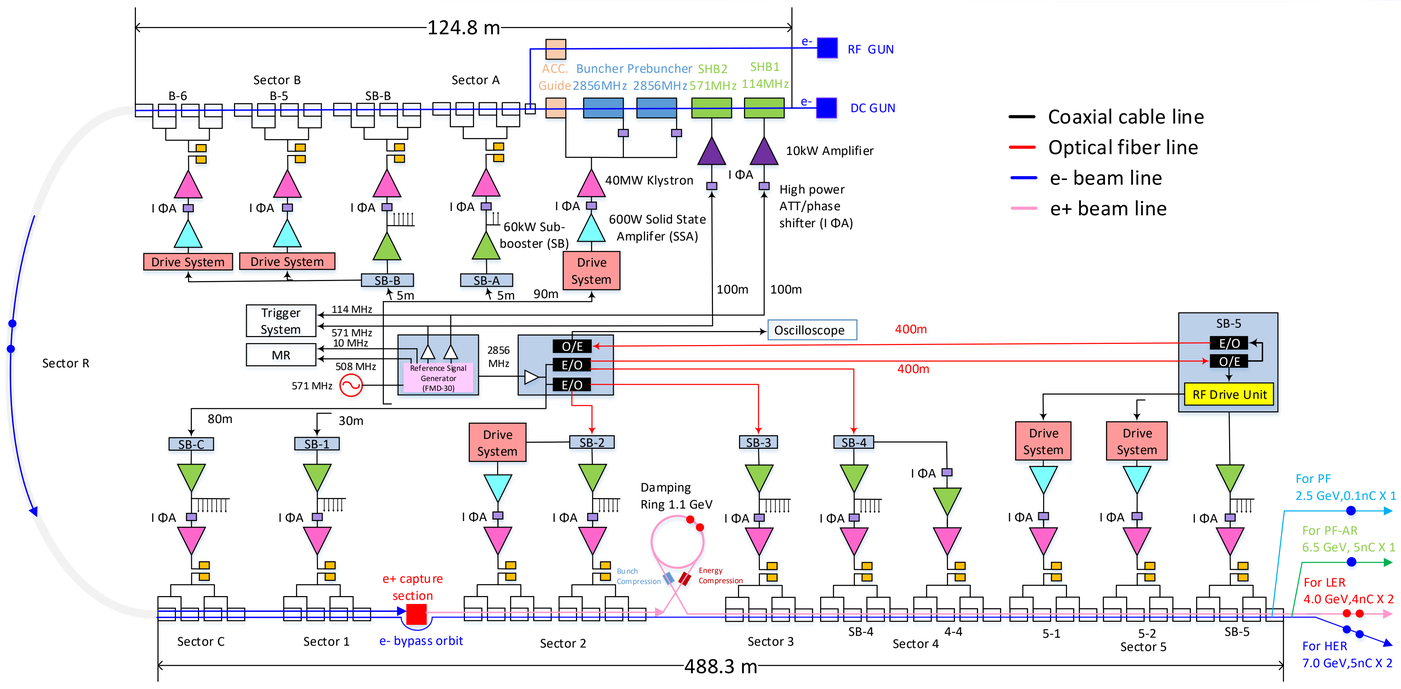

Layout of the RF reference distribution system for the SuperKEKB Injector LINAC

Temperature 0.1°C pk-pk (no humidity control)

2856 MHz Reference Phase Monitor System based on μTCA

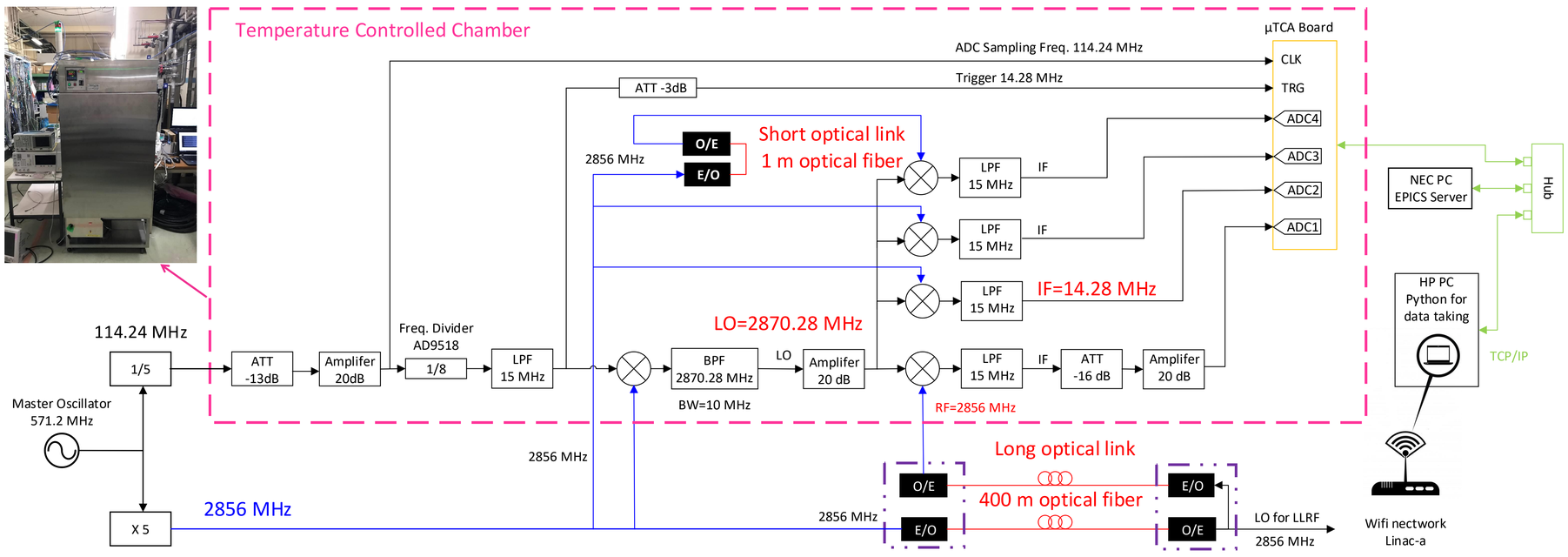

- ADC1: the long optical link (two pairs of E/O + 400m optical fiber +O/E)
- ADC2: Reference signal directly from the MO
- ADC3: Reference signal directly from the MO (different down-converter with ADC2)
- ADC4: the short optical link (one pair of E/O + 1 m optical fiber +O/E)

FPGA Virtex5-FX | 16-bit ADC x 4 (LTC2208) | 16-bit DAC x 4 (AD9783)

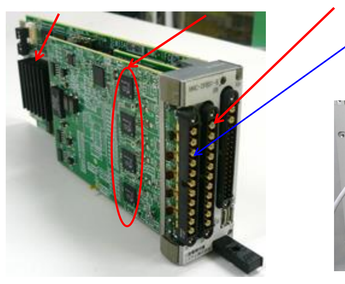

AMC(Advanced Mezzanine Card)

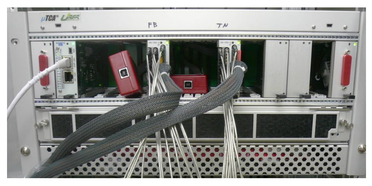

μTCA chassis

Short-term phase stability without Filter

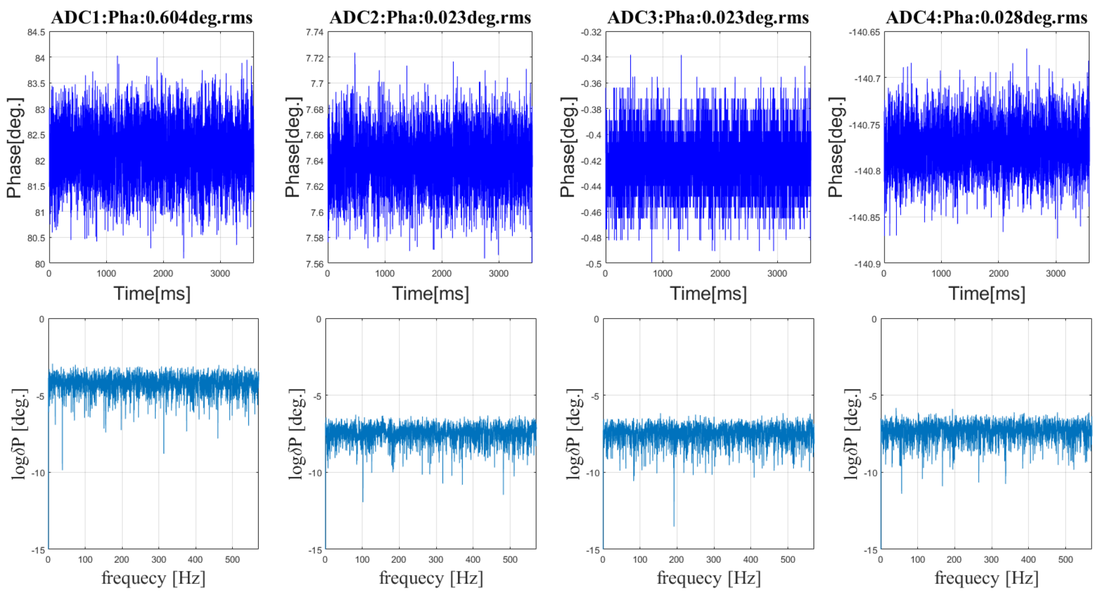

- There is no spurious spectrum from the FFT result.

Long-term phase drift for 72 hours

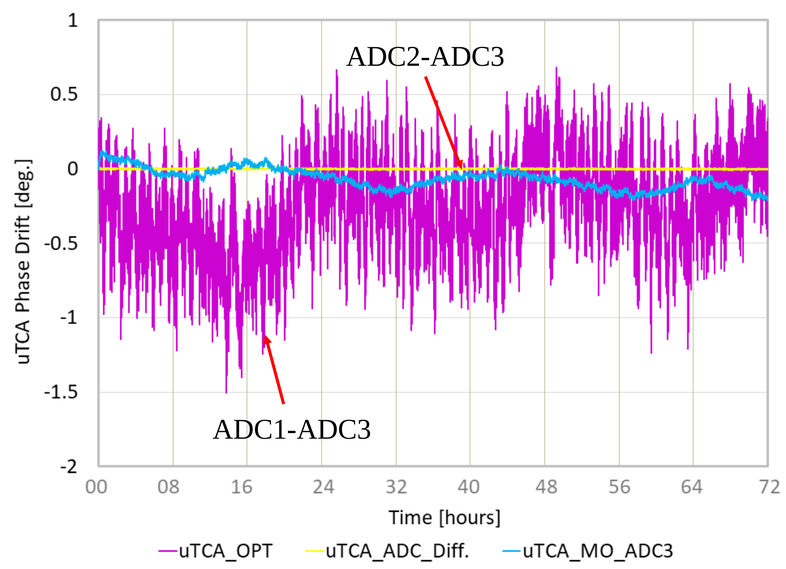

Short-term and long-term phase stability

Term	Type	ADC_Diff. [°]	MO [°]	SOPT [°]	LOPT [°]
Short-term (3.5s)	RMS	0.018	0.023	0.026	0.603
Long-term (72h)	Pk-Pk	0.0386	0.3414	--	2.1899

- The ADC noise is rejected by averaging.

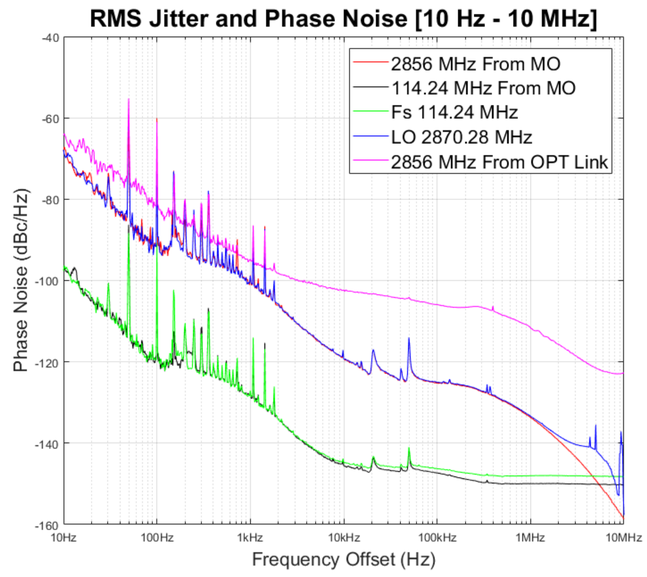

LO Phase Noise

Table 1: RMS Jitter and Phase Noise [10 Hz-10 MHz]

Model	Jitter [fs]	Phase Noise [°]
2856 MHz from MO	168.8487	0.1736
2856 MHz from OPT. Link	486.8541	0.5031
114.24 MHz from MO	245.5629	0.0101
Fs 114.24 MHz	289.3471	0.0119
LO 2870.28 MHz	191.4360	0.1978

- The phase noise is measured by Signal Source Analyzer (E5052).
- Compared to the MO reference phase, the phase noise of LO increases 0.024° .

Long-term phase drift dependence for 72 hours

Phase Drift Vs. Humidity

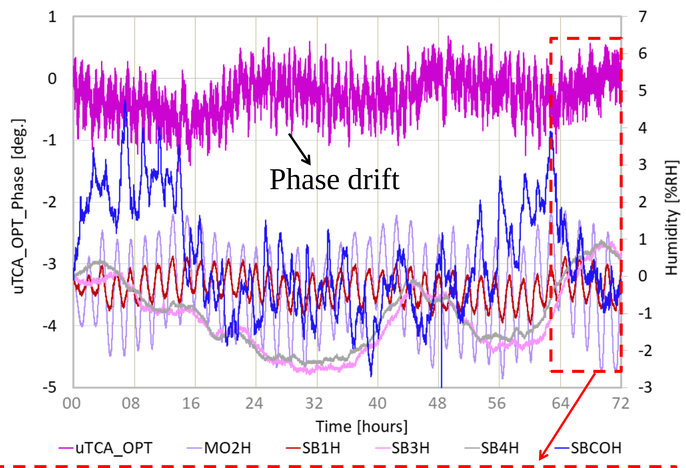

Phase Drift Vs. Temperature

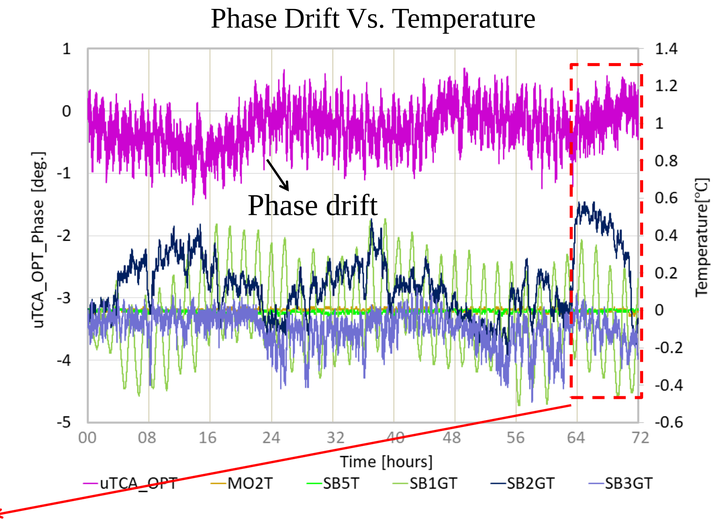

Phase drift Vs. Sector 1 humidity and temperature for 8h

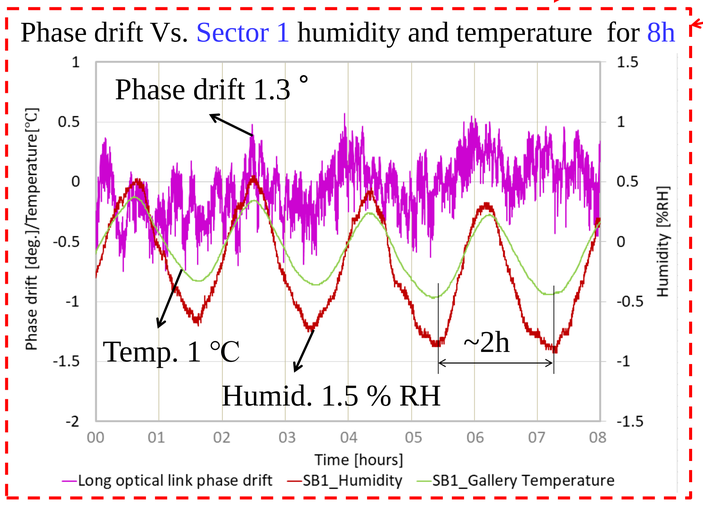

Optical link specification

	Temperature Coef.	Humidity Coef.
E/O+O/E	-0.615 ps/°C	-0.038 ps/%
Optical fiber	1 ps/km/°C	-0.9 ps/km/%

- The humidity and temperature fluctuation is very large in the gallery and oscillated synchronously in sector 1, close to the entrance of LINAC.
- The stabilization of the optical link with feedback control is necessary to fulfill the requirement for the SuperKEKB LINAC.

#: liuna@post.kek.jp